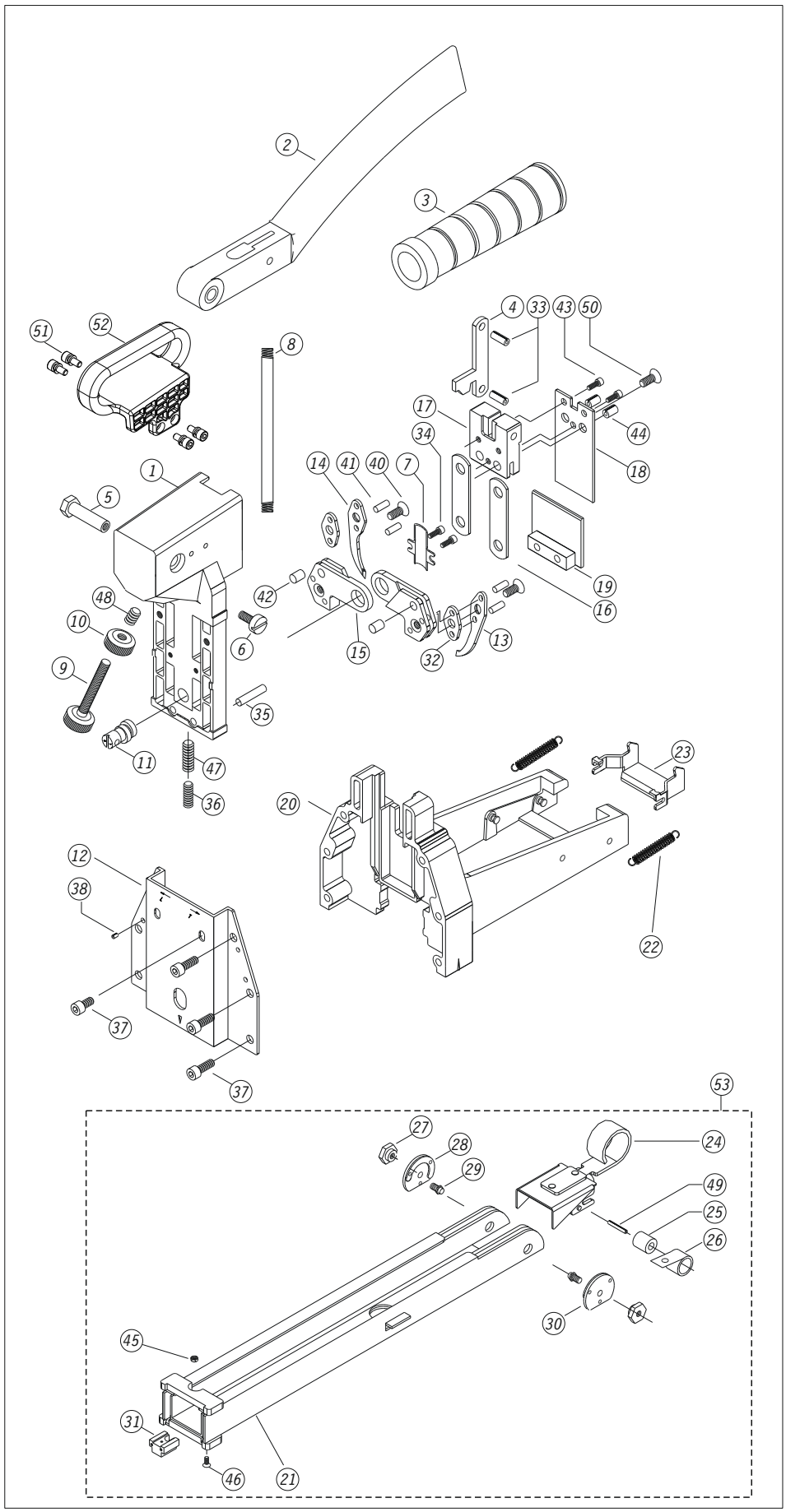Ref. No.	Part No.	*Description*
1	35M501	Body
2	32M502	Handle
3	35M003	Handle grip
4	35M004N	Link
5	35M005	Pivot Pin
6	35M006	Pivot Screw
7	35M007N	Cover
8	35M008N	Spring
9	35M010	Adjusting Screw
10	35M011	Adjusting Nut
11	35P018	Adjusting Rod
12	35M014N	Front plate
13	35P021	Right jaw
14	35P022	Left jaw
15	35P023	Jaw seat
16	35P024	Plate
17	32M517	Block
18	32M518	Driver
19	35M021N	Cover Unit
20	32M320	Magazine Seat
21	32P329	Magazine
22	32M522	Spring
23	32M523	Bracket
24	32P035	Pusher Unit
25	35P034	Roller
26	35P033	Spring
27	32P535	Rod Nut
28	35P037	Right pusher guide
29	35P032	Rod
30	35M032	Left pusher guide
31	34P339	Bracket
32	35P039	Washer
33	35M034N	Spring Pin
34	35P048	Screw
35	35P062	Rod
36	35P063	Screw
37	32P570	Screw
38	35P066	Spring Pin
40	35P069	Screw
41	35P070	Pin
42	35P071	Pin
43	35M046N	Screw
44	35P072	Spring Pin
45	35P076	Lock Nut
46	32P577	Screw
47	35P084	Heli-Coil
48	32M548	Heli-Coil
49	32M549	Spring Pin
50	32P585	Screw
51	35M051	Screw
52	35M052	Handle
53	32M321	Magazine Ass'y