Parti di ricambio - Spare parts - Ersatzteile - Pièces de rechange - Piezas de repuesto
Ανταλλακτικα - Partes sobresselentes - Wisselstukken - Reservedele

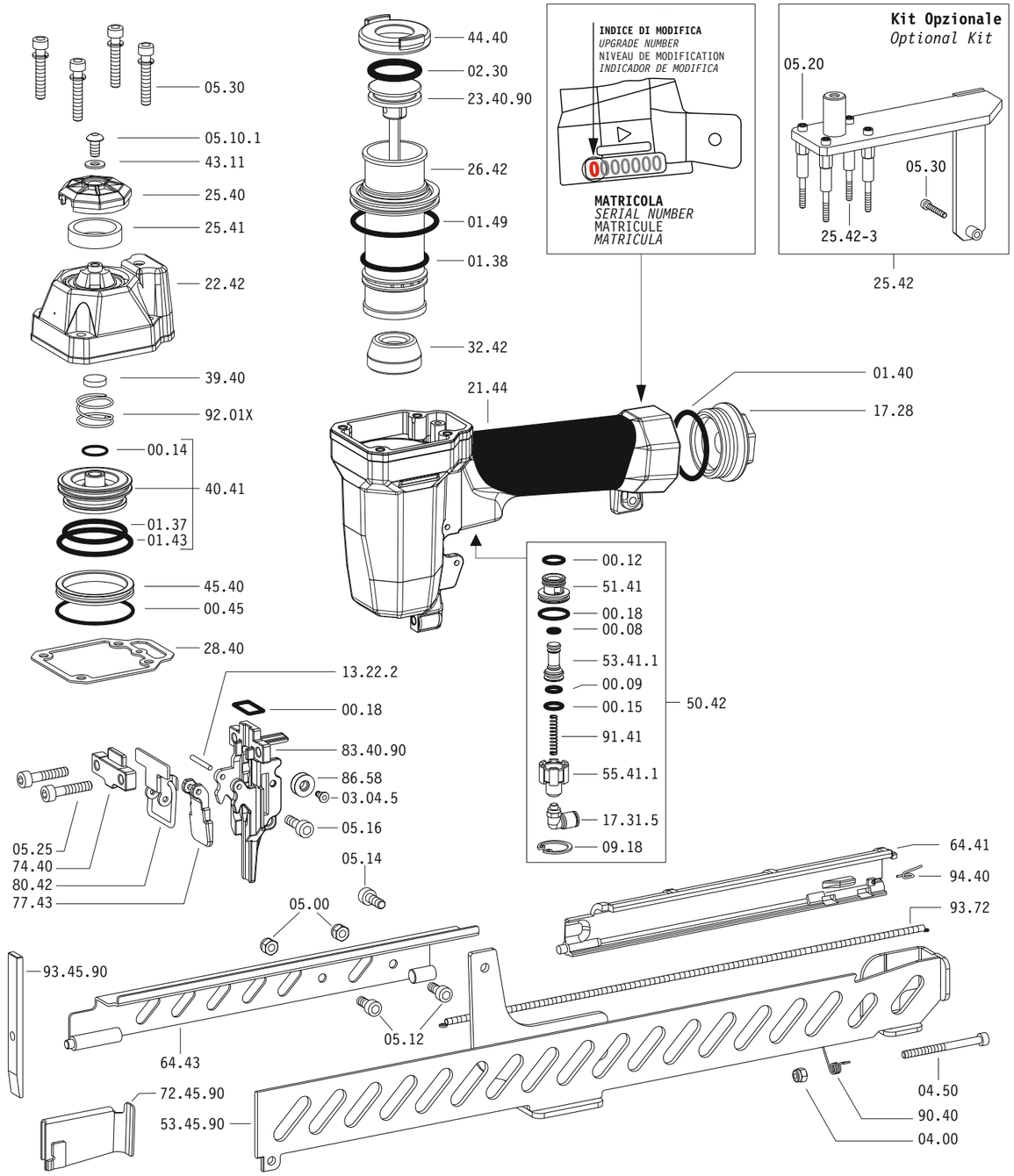

Dotazioni - Equipment - Ausrüstung - Équipements - Equipamiento - Παρεχομενα
Equipamento - Uitrusting - Udstyr

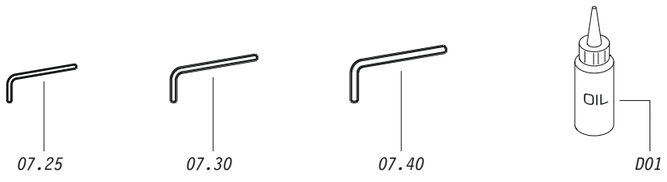

90.38 CLD3

cod. 142704530D

Parti di ricambio - Spare parts - Ersatzteile - Pièces de rechange - Piezas de repuesto
Ανταλλακτικα - Partes sobresselentes - Wisselstukken - Reservedele

Cod.	Descrizione	*Description*
00.08	O-Ring	*O-Ring*
00.09	O-Ring	*O-Ring*
00.12	O-Ring	*O-Ring*
00.14	O-Ring	*O-Ring*
00.15	O-Ring	*O-Ring*
00.18	O-Ring	*O-Ring*
00.45	O-Ring	*O-Ring*
01.37	O-Ring	*O-Ring*
01.38	O-Ring	*O-Ring*
01.40	O-Ring	*O-Ring*
01.43	O-Ring	*O-Ring*
01.49	O-Ring	*O-Ring*
02.30	O-Ring	*O-Ring*
03.04.5	Vite	*Screw*
04.00	Dado	*Nut*
04.50	Vite	*Screw*
05.00	Dado	*Nut*
05.10.1	Vite	*Screw*
05.12	Vite	*Screw*
05.14	Vite	*Screw*
05.16	Vite	*Screw*
05.20	Vite	*Screw*
05.25	Vite	*Screw*
05.30	Vite	*Screw*
07.25	Chiave esagonale	*Hex. bar wrench*
07.30	Chiave esagonale	*Hex. bar wrench*
07.40	Chiave esagonale	*Hex. bar wrench*
09.18	Anello elastico	*Elastic ring*
13.22.2	Spina	*Pin*
17.28	Tappo	*Inlet cap*
17.31.5	Raccordo	*Air plug*
21.44	Corpo	*Body*
22.42	Testa	*Head*
25.40	Deflettore	*Exhaust deflector*
25.41	Silenziatore	*Silencer*
25.42	Supporto	*Support*
25.42-3	Distanziale	*Spacer*
26.42	Cilindro	*Cylinder*
28.40	Guarnizione testa	*Head gasket*
32.42	Ammortizzatore	*Bumper*
39.40	Guarnizione scarico	*Exhaust seal*
40.41	Valvola completa	*Valve ass'y*
43.11	Rondella	*Washer*
44.40	Guarnizione	*Gasket*
45.40	Anello valvola	*Ring*
50.42	Pulsante completo	*Trigger valve ass'y*
51.41	Boccola pulsante	*Trigger valve housing*
53.41.1	Pistone servovalvola	*Valve piston*
55.41.1	Raccordo pulsante	*Bush*
64.41	Carter	*Hold down*
64.43	Carter	*Hold down*
74.40	Staffa testina	*Nose guide*
77.43	Guida testina	*Safety nose plate*
80.42	Grilletto testina	*Nose plate lock*
86.58	Carrucola	*Pulley*
90.40	Molla	*Spring*
91.41	Molla	*Spring*
92.01X	Molla	*Spring*
93.72	Molla	*Spring*
94.40	Molla	*Spring*
23.40.90	Battente	*Driver*
53.45.90	Caricatore	*Magazine*
72.45.90	Spingipunto	*Pusher*
83.40.90	Controtestina	*Nose*
93.45.90	Testina	*Nose plate*
D01	Boccetta olio	*Oiler*

Guarnizioni - O-Rings - Dichtungen - Joints - Kit O-Rings - Λαστιχακια - Kit O-Rings - O-ringen - Pakninger

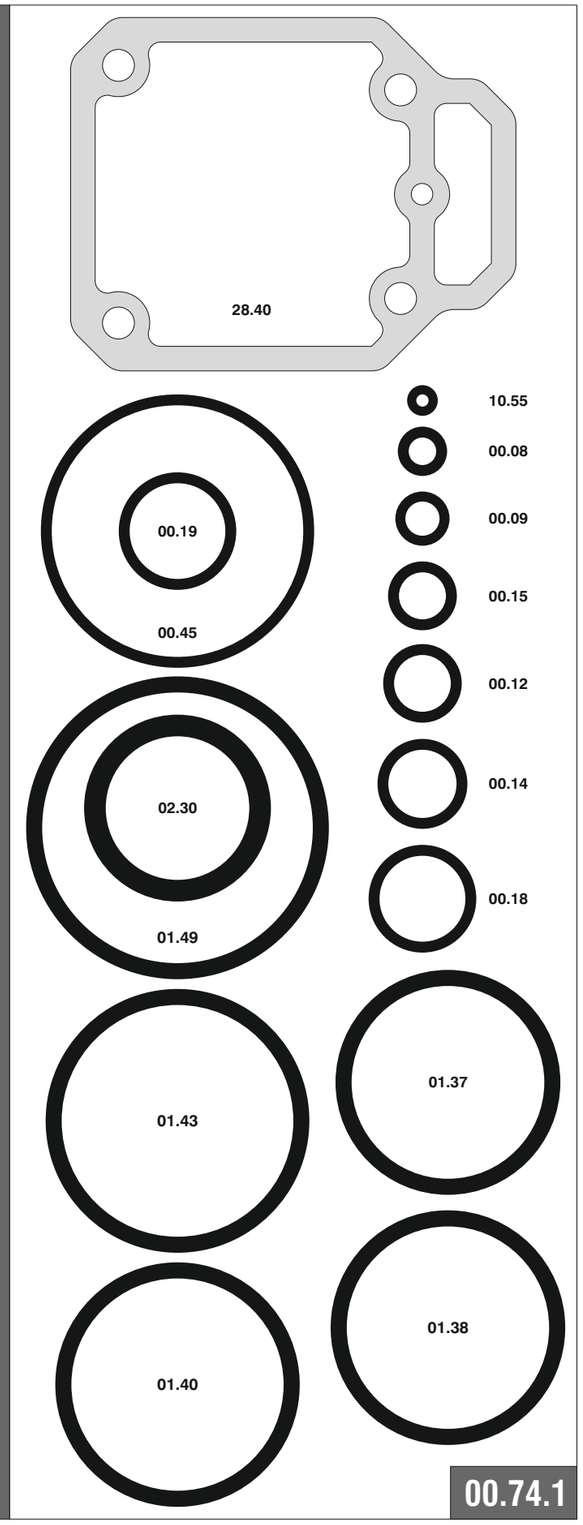

00.74.1

90.38 CLD3

cod. 142704530D

Indice di modifica
Upgrade number **2**