Parti di ricambio - Spare parts - Ersatzteile - Pièces de rechange - Piezas de repuesto
Ανταλλακτικα - Partes sobresselentes - Tabel te raadplegen - Reservedele

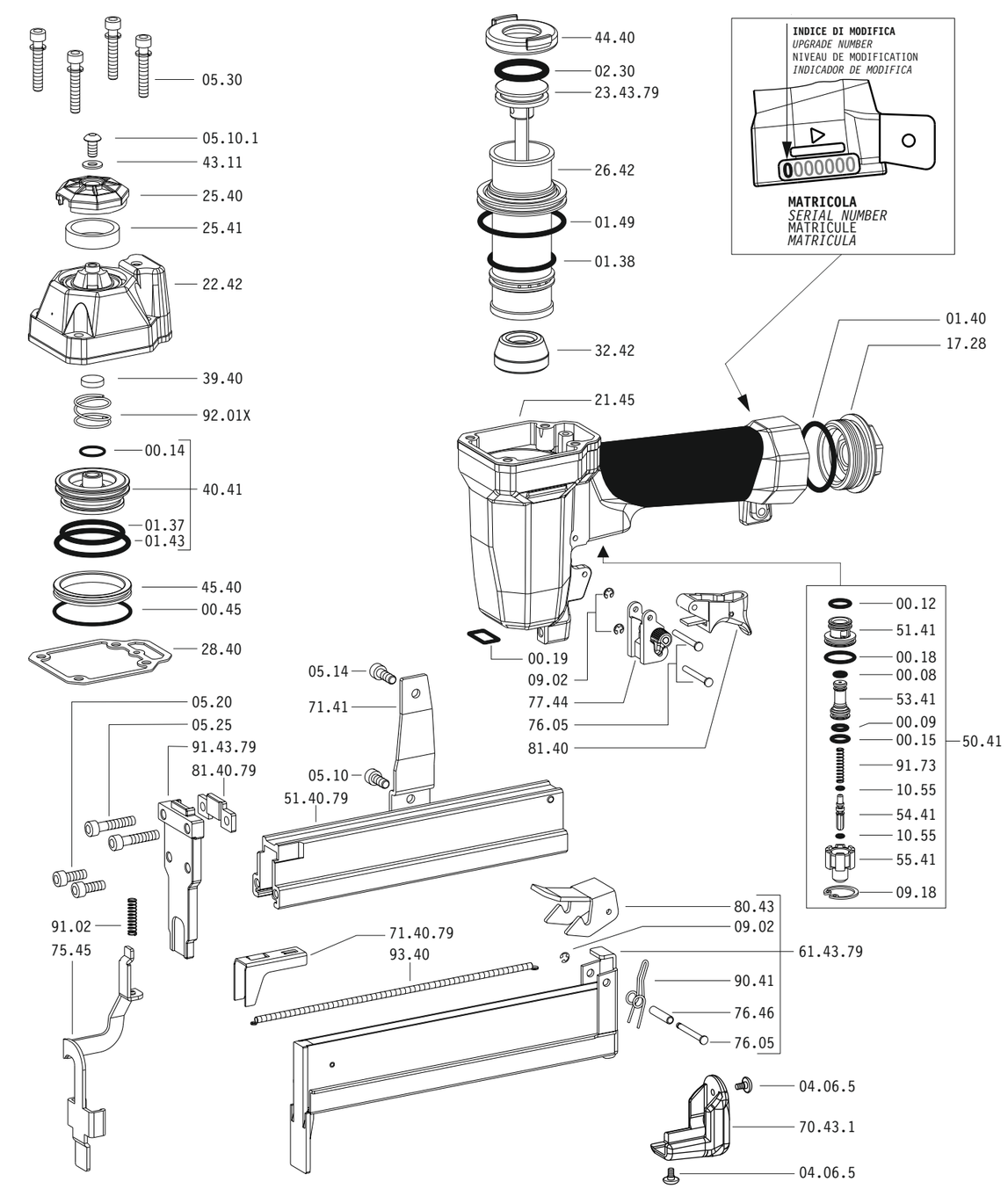

Dotazioni - Equipment - Ausrüstung - Équipements - Equipamiento - Παρεχομενα
Equipamento - Uitrusting - Udstyr

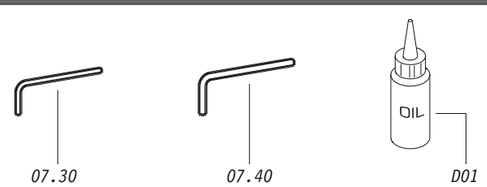

500.38 B

cod. 1427930

Parti di ricambio - Spare parts - Ersatzteile - Pièces de rechange - Piezas de repuesto
Ανταλλακτικα - Partes sobresselentes - Tabel te raadplegen - Reservedele

Cod.	Descrizione	*Description*
00.08	O-Ring	*O-Ring*
00.09	O-Ring	*O-Ring*
00.12	O-Ring	*O-Ring*
00.14	O-Ring	*O-Ring*
00.15	O-Ring	*O-Ring*
00.18	O-Ring	*O-Ring*
00.19	O-Ring	*O-Ring*
00.45	O-Ring	*O-Ring*
01.37	O-Ring	*O-Ring*
01.38	O-Ring	*O-Ring*
01.40	O-Ring	*O-Ring*
01.43	O-Ring	*O-Ring*
01.49	O-Ring	*O-Ring*
02.30	O-Ring	*O-Ring*
05.10	Vite	*Screw*
04.06.05	Vite	*Screw*
05.10	Vite	*Screw*
05.10.1	Vite	*Screw*
05.14	Vite	*Screw*
05.20	Vite	*Screw*
05.25	Vite	*Screw*
05.30	Vite	*Screw*
07.30	Chiave esagonale	*Hex. bar wrench*
07.40	Chiave esagonale	*Hex. bar wrench*
09.02	Anello elastico	*Elastic ring*
09.18	Anello elastico	*Elastic ring*
10.55	O-Ring	*O-Ring*
17.28	Tappo	*Inlet cap*
21.45	Corpo	*Body*
22.42	Testa	*Head*
25.40	Deflettore	*Exhaust deflector*
25.41	Silenziatore	*Silencer*
26.42	Cilindro	*Cylinder*
28.40	Guarnizione testa	*Head gasket*
32.42	Ammortizzatore	*Bumper*
39.40	Guarnizione scarico	*Exhaust seal*
40.41	Valvola completa	*Valve ass'y*
43.11	Rondella	*Washer*
44.40	Guarnizione	*Gasket*
45.40	Anello valvola	*Ring*
50.41	Pulsante completo	*Trigger valve ass'y*
51.41	Boccola pulsante	*Trigger valve housing*
53.41	Pistone servovalvola	*Valve piston*
54.41	Pulsante	*Trigger valve*
55.41	Raccordo pulsante	*Bush*
71.41	Reggicaricatore	*Support*
70.43.1	Protezione	*Guard*
75.45	Sicura	*Safety*
76.05	Perno	*Pin*
76.46	Perno molla	*Pin*
77.44	Guida sicura	*Safety guide*
80.43	Grilletto chiusura	*Trigger*
81.40	Grilletto comando	*Trigger*
90.41	Molla	*Spring*
91.02	Molla	*Spring*
91.73	Molla	*Spring*
92.01X	Molla	*Spring*
93.40	Molla	*Spring*
23.43.79	Battente	*Driver*
51.40.79	Caricatore	*Magazine*
61.43.79	Carrello	*Slider*
71.40.79	Spingipunto	*Pusher*
81.40.79	Controtestina	*Nose*
91.43.79	Testina	*Nose plate*
D01	Boccetta olio	*Oiler*

Guarnizioni - O-Rings - Dichtungen - Joints - Kit O-Rings - Λαστιχακια - Kit O-Rings - O-ringen - Pakninger

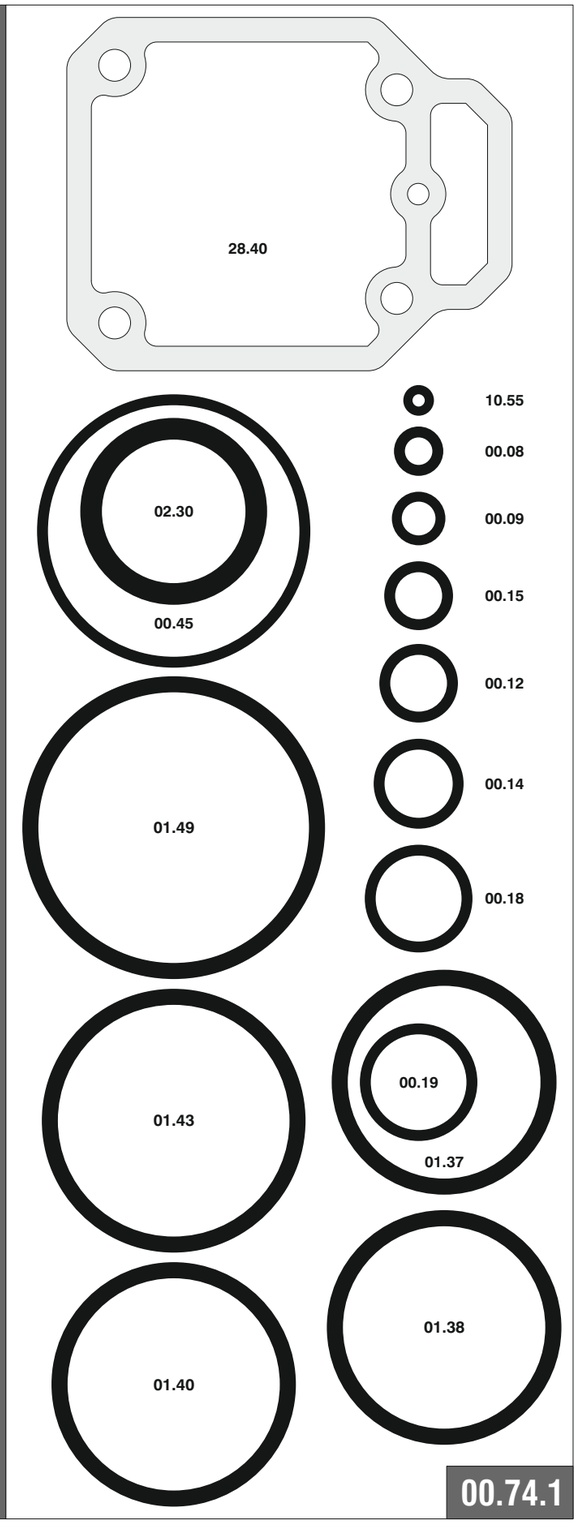

00.74.1

1427930_50038B_2 040614 IV

500.38 B **cod. 1427930**

Indice di modifica
Upgrade number 2