Parti di ricambio - Spare parts - Ersatzteile - Pièces de rechange - Piezas de repuesto
Ανταλλακτικα - Partes sobresselentes - Wisselstukken - Reservedele

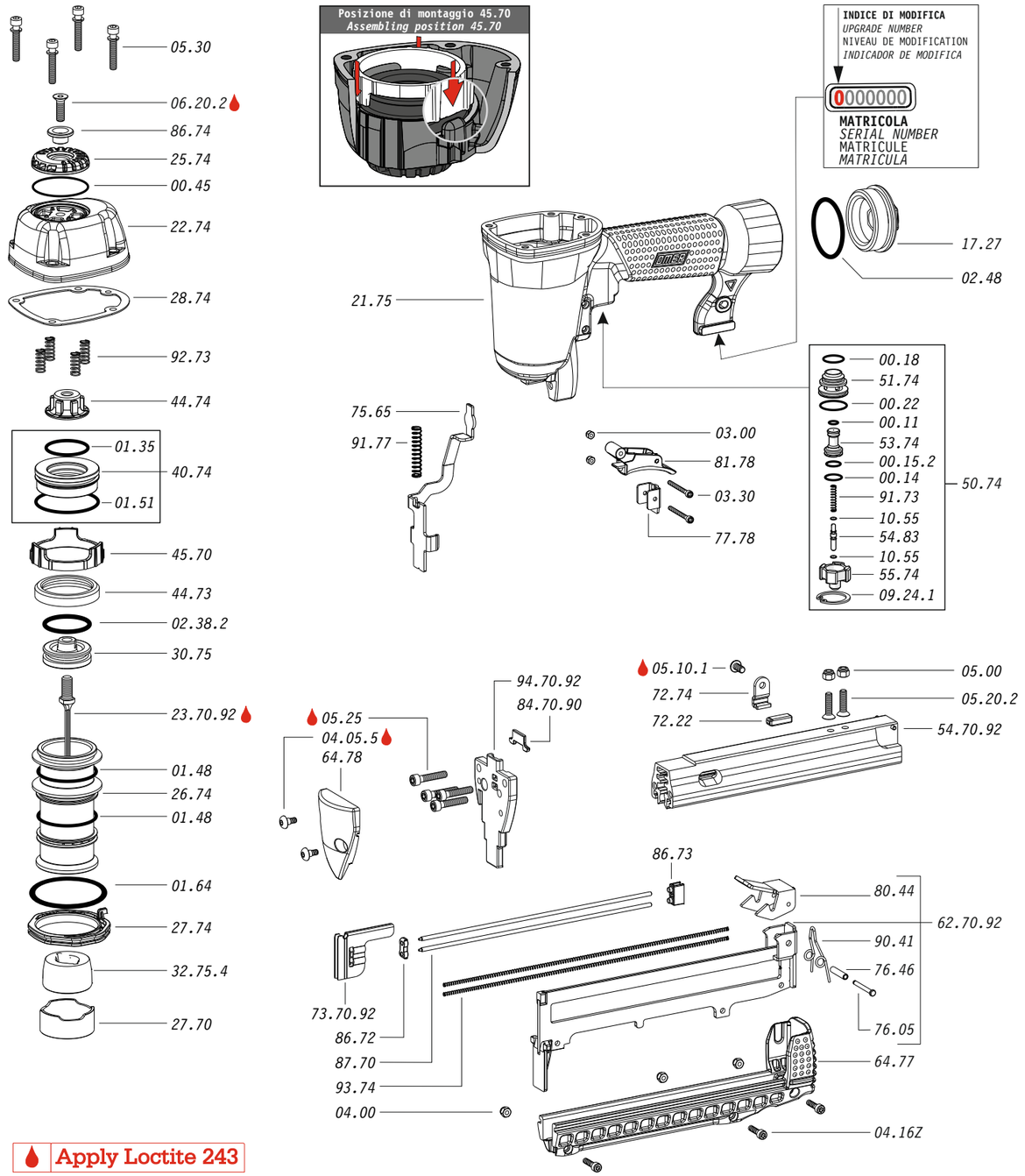

Dotazioni - Equipment - Ausrüstung - Équipements - Equipamiento - Παρεχομενα
Equipamento - Uitrusting - Udstyr

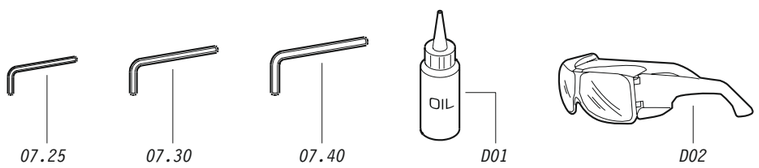

92.740

cod. 1747200

Parti di ricambio - Spare parts - Ersatzteile - Pièces de rechange - Piezas de repuesto
Ανταλλακτικα - Partes sobresselentes - Wisselstukken - Reservedele

Cod.	Descrizione	*Description*
00.11	O-Ring	*O-Ring*
00.14	O-Ring	*O-Ring*
00.15.2	O-Ring	*O-Ring*
00.18	O-Ring	*O-Ring*
00.22	O-Ring	*O-Ring*
00.45	O-Ring	*O-Ring*
01.35	O-Ring	*O-Ring*
01.48	O-Ring	*O-Ring*
01.51	O-Ring	*O-Ring*
01.64	O-Ring	*O-Ring*
02.38.2	O-Ring	*O-Ring*
02.48	O-Ring	*O-Ring*
03.00	Dado	*Nut*
03.30	Dado	*Nut*
04.00	Dado	*Nut*
04.05.5	Vite	*Screw*
04.16Z	Vite	*Screw*
05.00	Dado	*Nut*
05.10.1	Vite	*Screw*
05.20.2	Vite	*Screw*
05.25	Vite	*Screw*
05.30	Vite	*Screw*
06.20.2	Vite	*Screw*
07.25	Chiave esagonale	*Hex. bar wrench*
07.30	Chiave esagonale	*Hex. bar wrench*
07.40	Chiave esagonale	*Hex. bar wrench*
09.24.1	Anello elastico	*Elastic ring*
10.55	O-Ring	*O-Ring*
17.27	Tappo	*Inlet cap*
21.75	Corpo	*Body*
22.74	Testa	*Head*
25.74	Deflettore scarico	*Exhaust deflector*
26.74	Cilindro	*Cylinder*
27.70	Anello	*Ring*
27.74	Anello cilindro	*Cylinder ring*
28.74	Guarnizione testa	*Head gasket*
30.75	Pistone	*Piston*
32.75.4	Ammortizzatore	*Bumper*
40.74	Valvola completa	*Valve assembled*
44.73	Guarnizione cilindro	*Cylinder gasket*
44.74	Ammortizzatore sup.	*Upper bumper*
45.70	Distanziale	*Spacer*
50.74	Pulsante completo	*Trigger valve assy*
51.74	Boccola servovalvola	*Servo valve bushing*
53.74	Pistone servovalvola	*Servo valve piston*
54.83	Pulsante	*Trigger valve*
55.74	Raccordo pulsante	*Trigger valve bush*
64.77	Guida carrello	*Slider guide*
64.78	Carter sicura	*Safety guard*
72.22	Fermo carrello	*Slider stop*
72.74	Fermo di gomma	*Rubber stop*
75.65	Sicura	*Safety*
76.05	Perno	*Pin*
76.46	Perno molla	*Spring pin*
77.78	Guida sicura	*Safety guide*
80.44	Grilletto chiusura	*Trigger*
81.78	Grilletto comando BF	*BF Trigger*
86.72	Guida spingipunto	*Pusher guide*
86.73	Guida perni	*Pin guide*
86.74	Boccola	*Bushing*
87.70	Perno porta molla	*Spring guide pin*
90.41	Molla	*Spring*
91.73	Molla	*Spring*
91.77	Molla	*Spring*
92.73	Molla	*Spring*
93.74	Molla	*Spring*
23.70.92	Battente	*Driver*
54.70.92	Caricatore	*Magazine*
62.70.92	Carrello	*Slider*
73.70.92	Spingipunto	*Pusher*
84.70.90	Controtestina	*Nose*
94.70.92	Testina	*Nose plate*
D01	Boccetta olio	*Oiler*
D02	Occhiali protettivi	*Protective goggles*

Guarnizioni - O-Rings - Dichtungen - Joints - Kit O-Rings - Λαστιχακια - Kit O-Rings - O-ringen - Pakninger

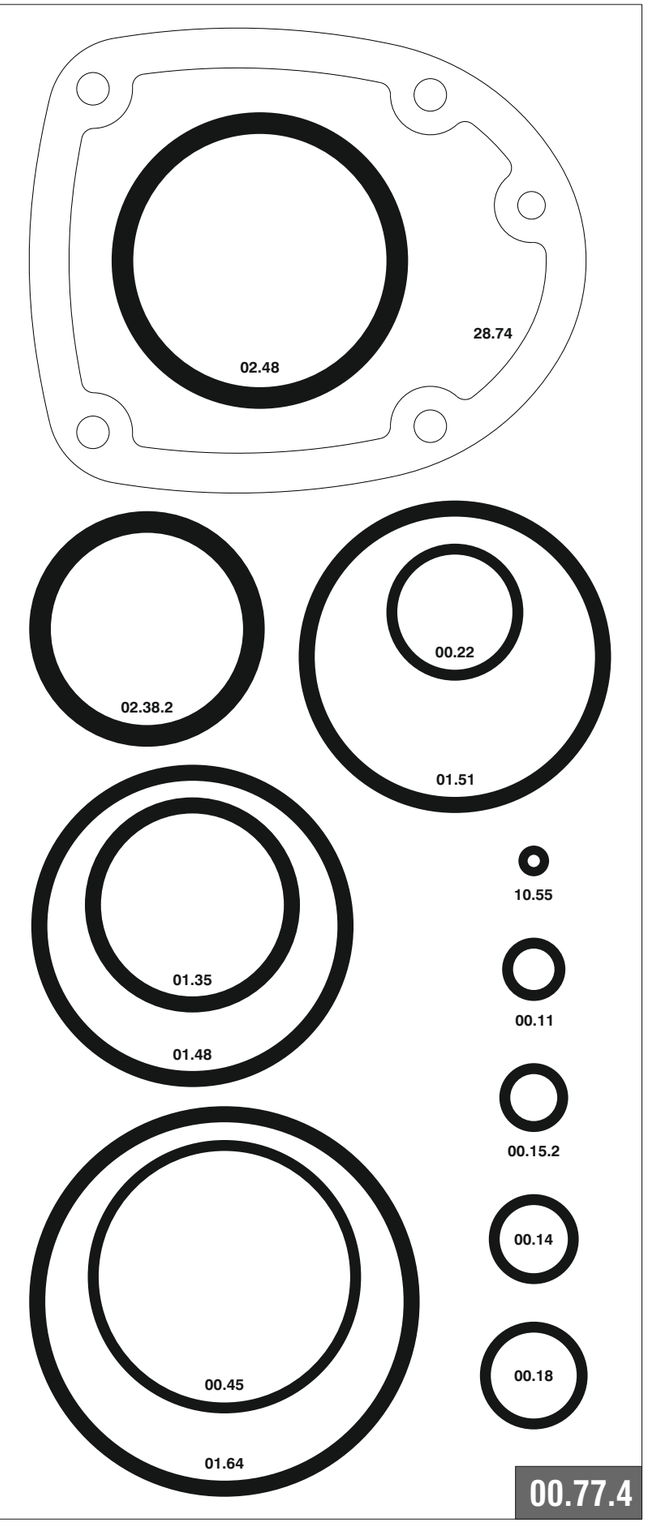

92.740 **cod. 1747200** **Indice di modifica** Upgrade number **4**